SCHEMATIC DIAGRAM

1. Power Schematic Diagram

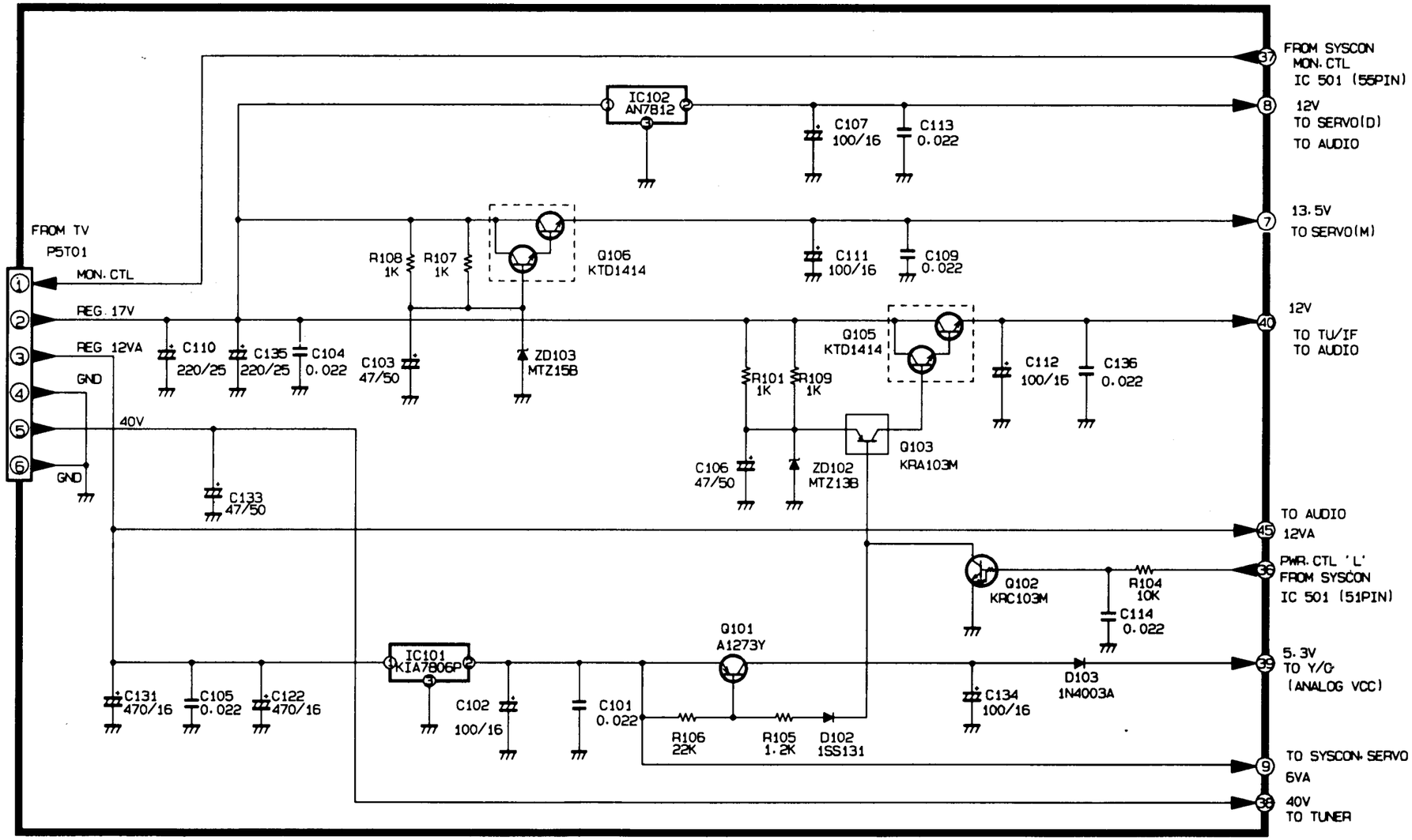

Shematic Diagram from http://cxema.ru

2. Tuner/ IF Schematic Diagram

Shematic Diagram from http://cxema.ru

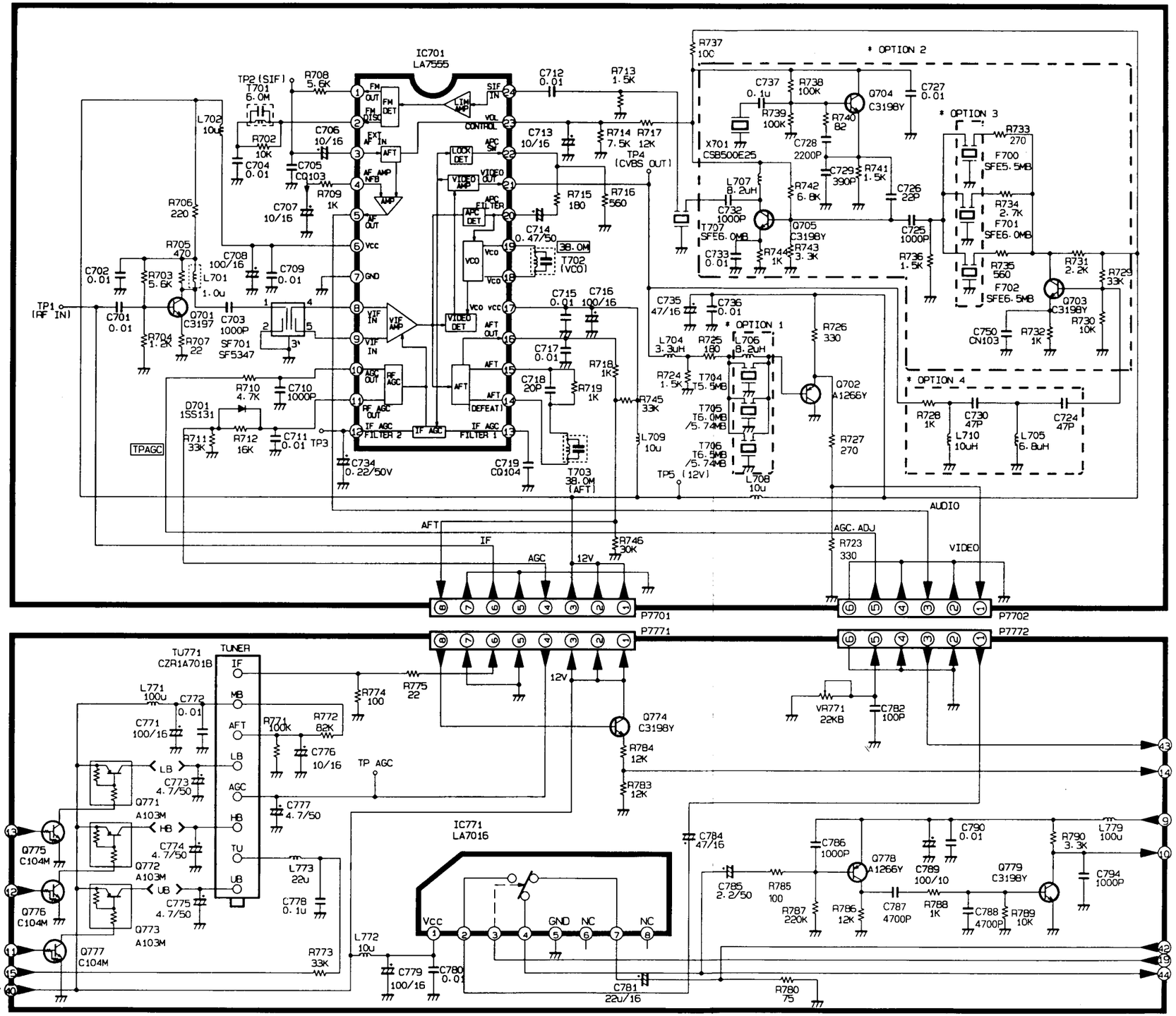

* OPTION

ITEM \ SYSTEM		B/G+D/K	I	I/I+B/G	REMARK
OPTION 1	T704	O	X	O	T5.5MB
	T705	T5.74MB	T6.0MB	T6.0MB	T5.74MB / T6.0MB
	T706	T6.5MB	X	T5.74MB	T5.74MB / T6.5MB
	L706	8.2u	12u	8.2u	8.2u/12u
OPTION 3	F700	O	X	O	SFE 5.5MB
	F701	X	X	O	SFE 6.0MB
	F702	O	X	X	SFE 6.5MB
OPTION 4	R728	1K	47	1K	47/1K
	L710	O	X	O	10u
	L705	6.8u	12u	6.8u	6.8u/12u
OPTION 2		O	X	O	ALL
W700		X	O	X	TIN WIRE (PCB)
PCB		A	B	A	0158A/B

5. Audio Schematic Diagram

REC MODE
EE MODE
PB MODE

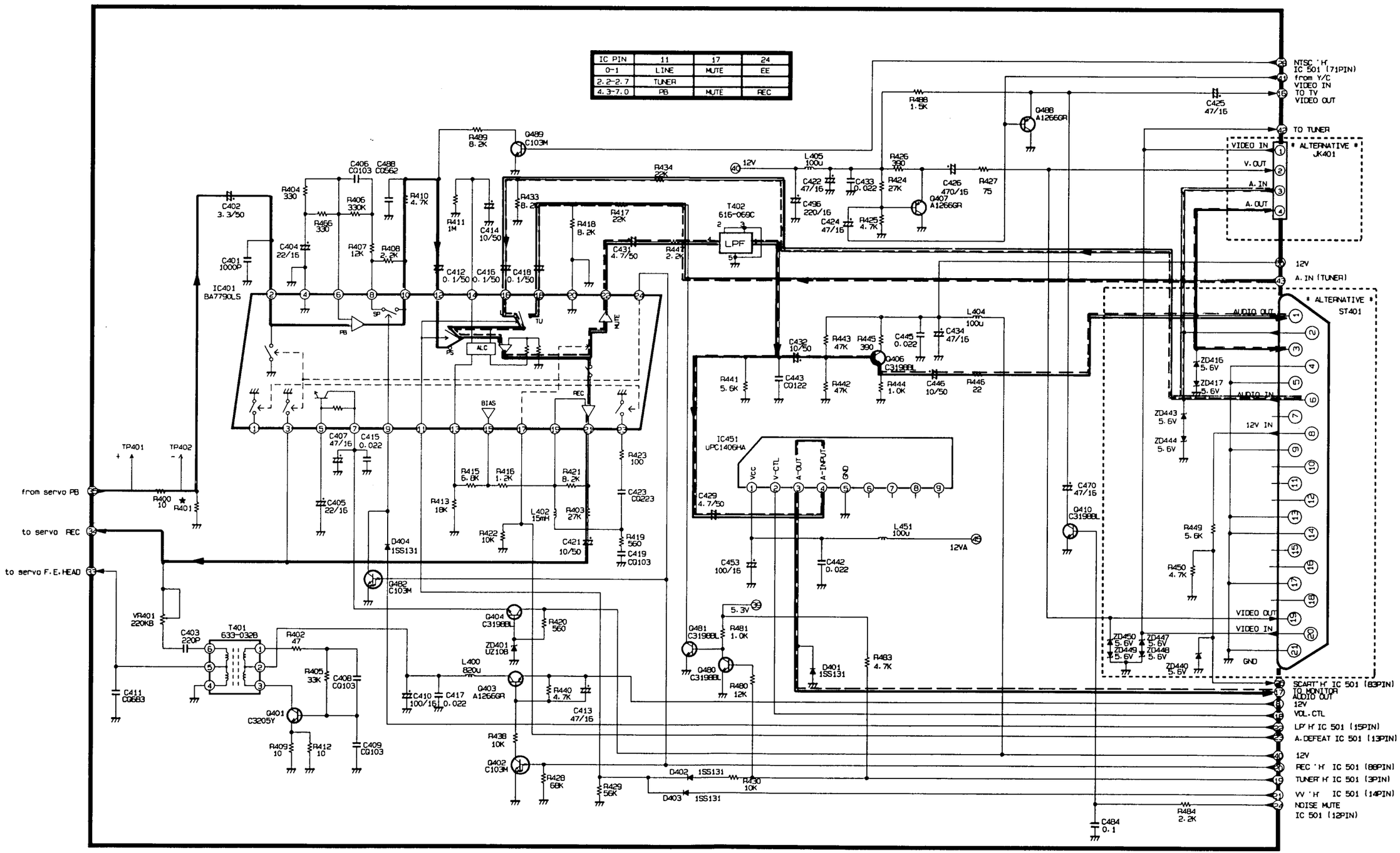

Shematic Diagram from http://cxema.ru

6. Y/C Schematic Diagram

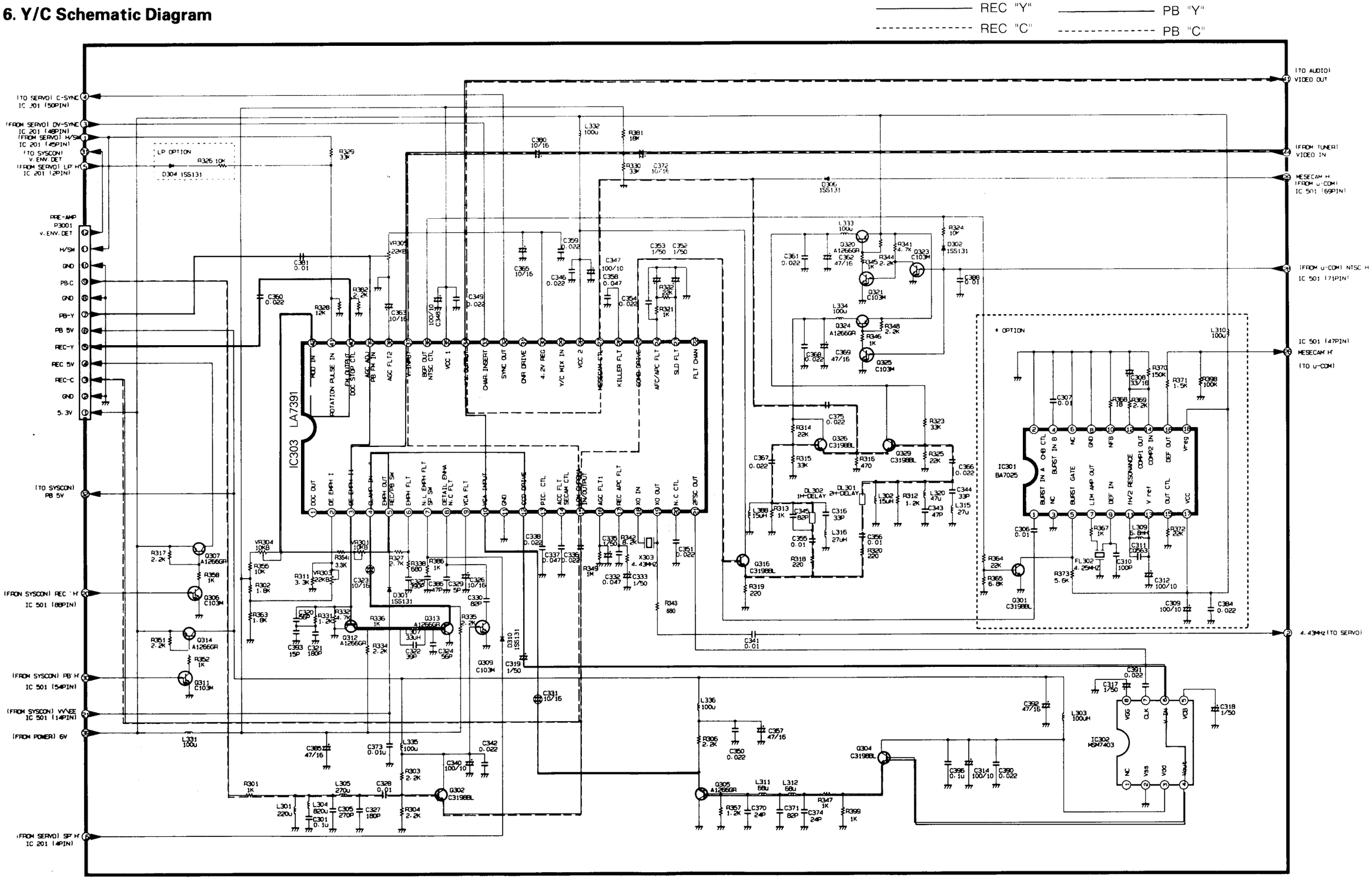

Shematic Diagram from http://cxema.ru

7. Pre-Amp Schematic Diagram

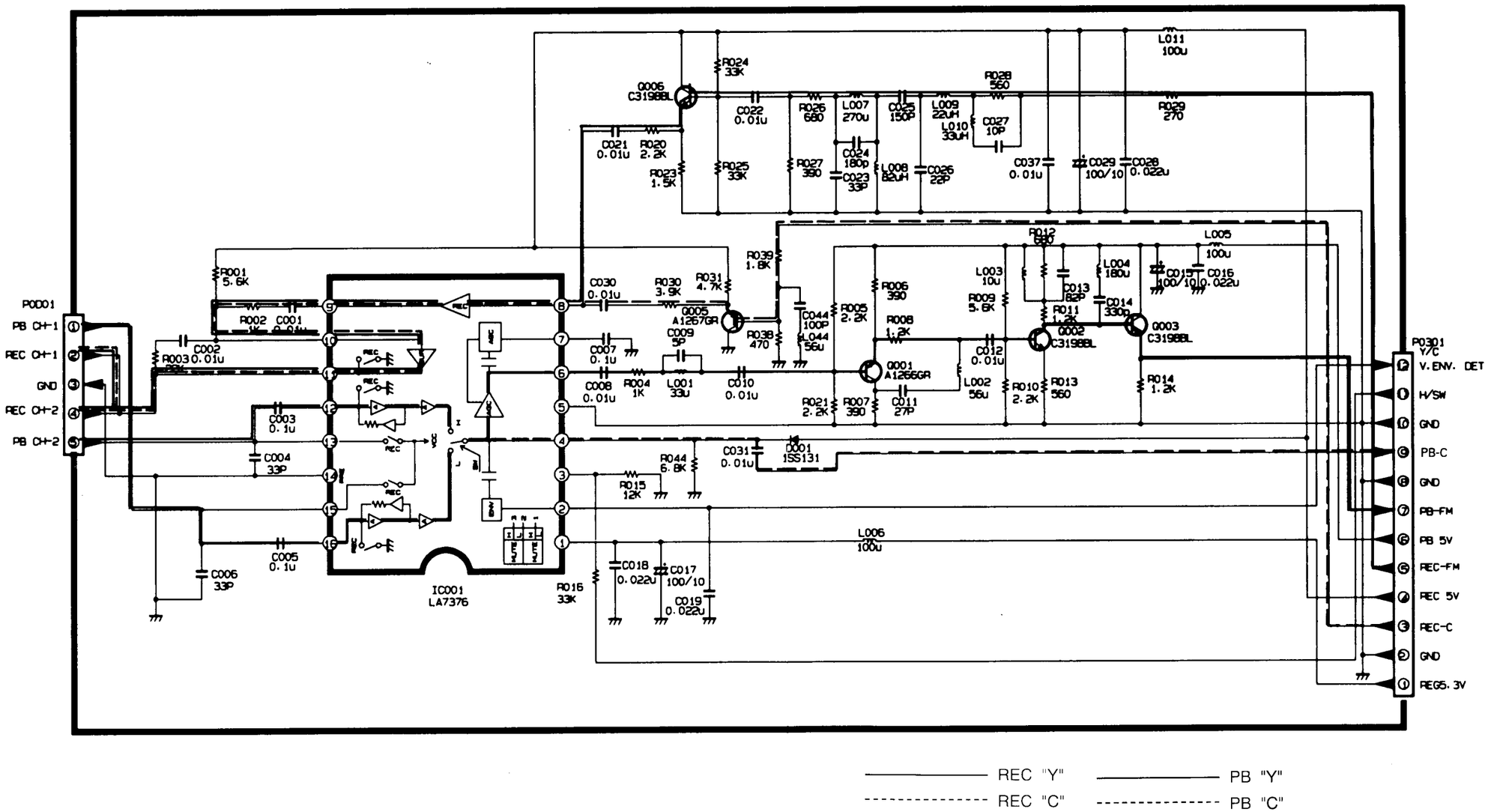

Shematic Diagram from http://cxema.ru

Shematic Diagram from http://cxema.ru

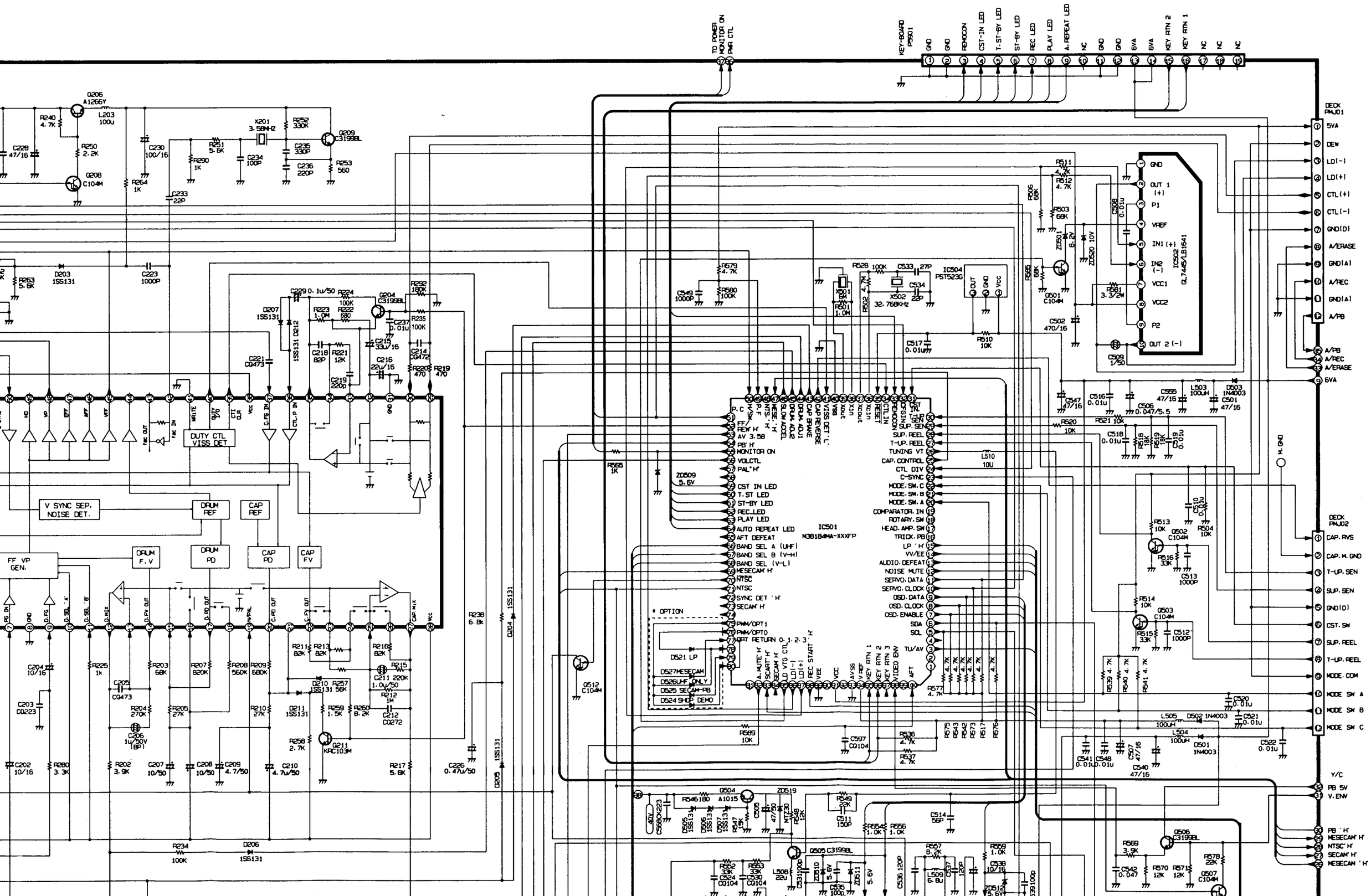

Shematic Diagram from http://cxema.ru

3. Servo Schematic Diagram

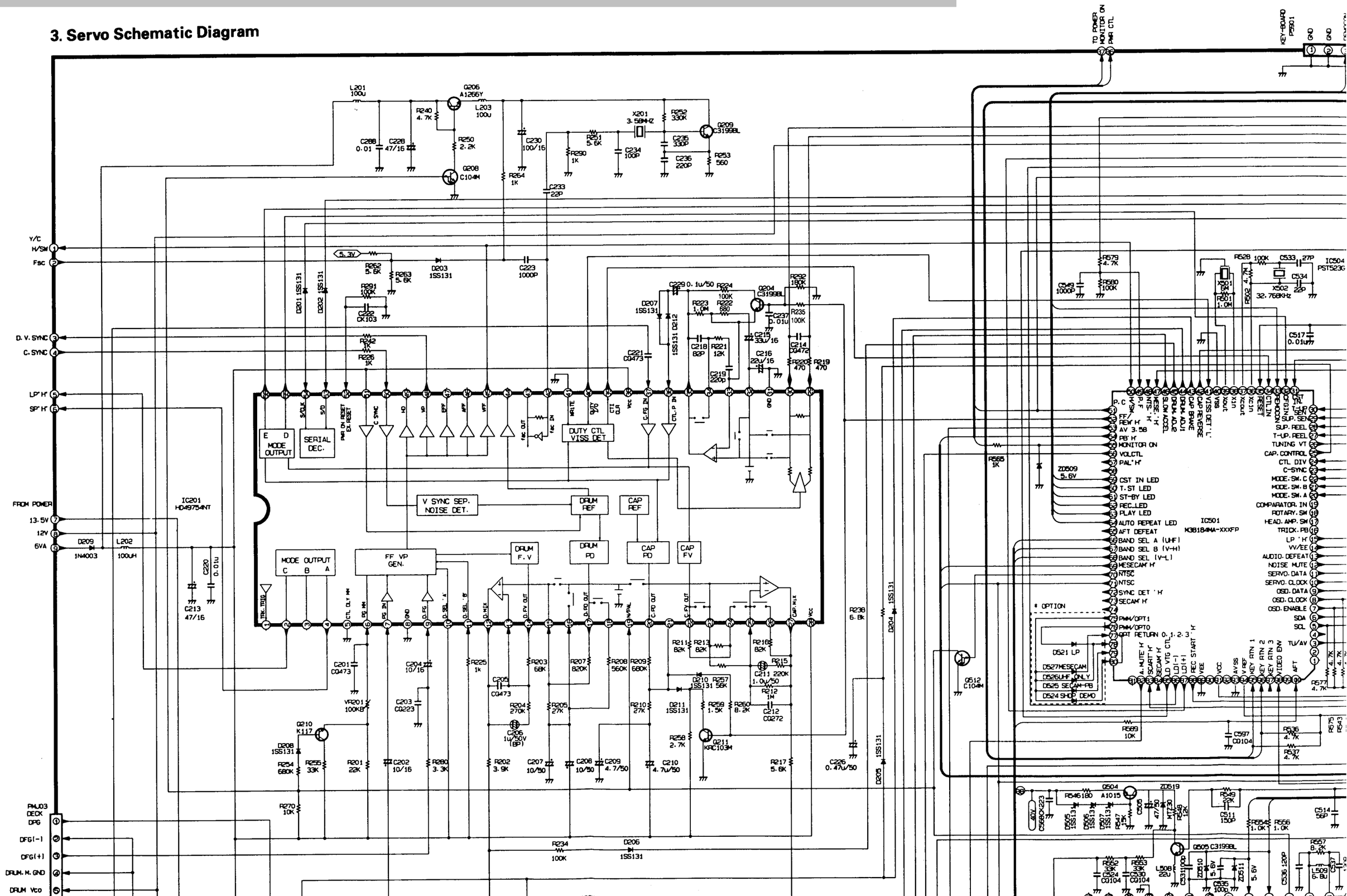

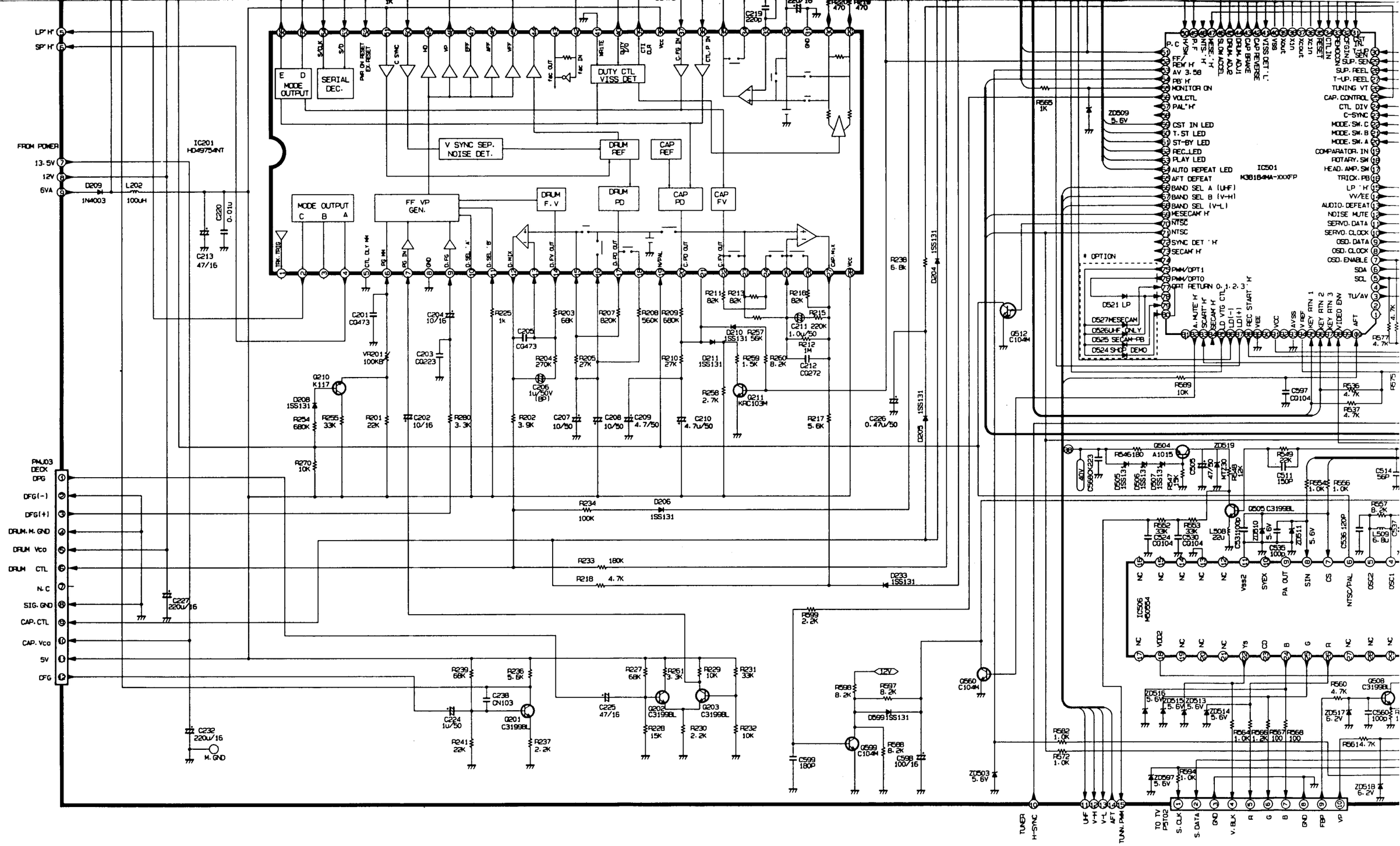

Shematic Diagram from http://cxema.ru

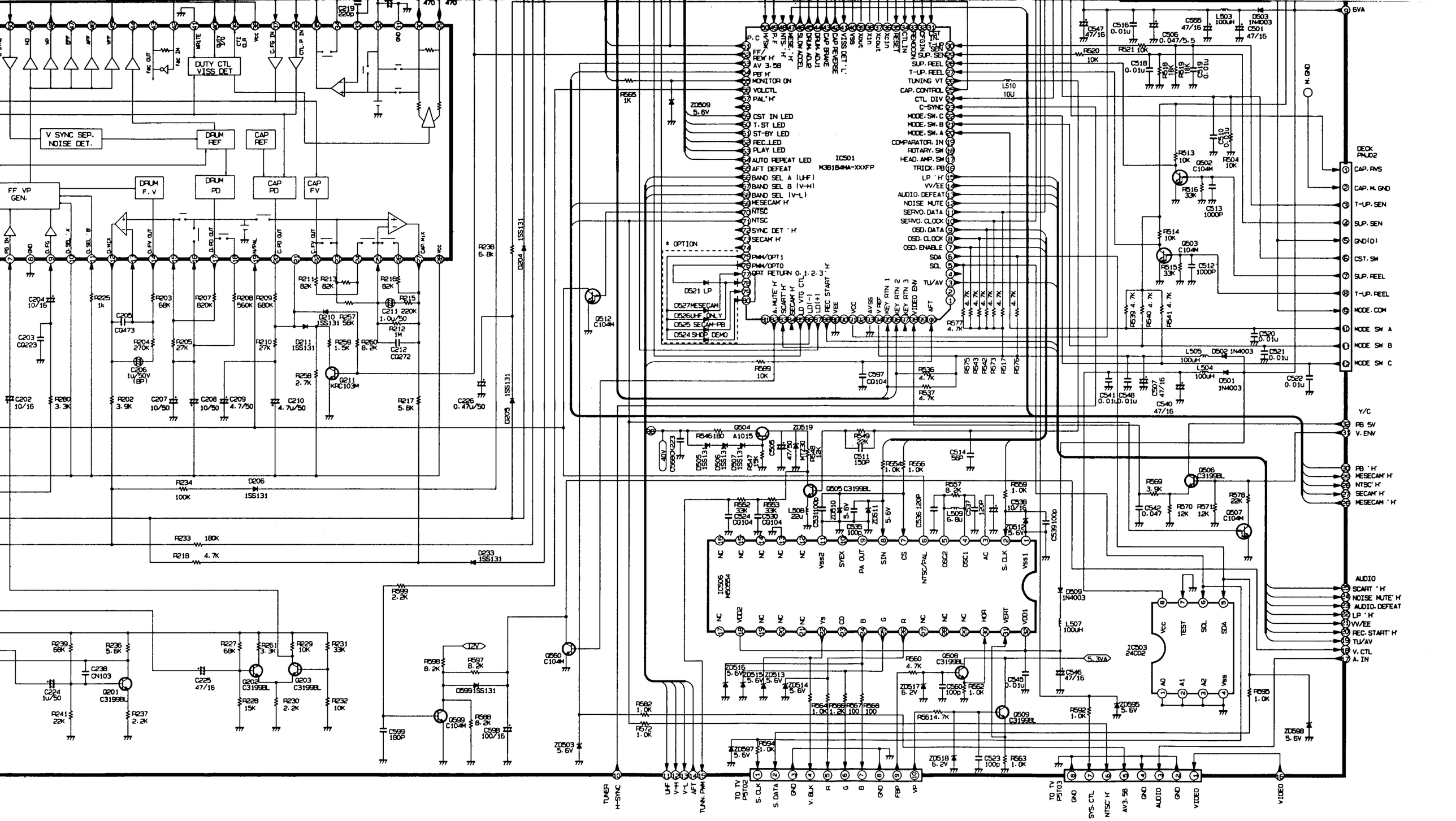

Shematic Diagram from http://cxema.ru

IC201 Pin㊲
CAPSTAN F.G

IC201 Pin㊴
CLOCK CTL

IC201 Pin㊺
SW30

IC201 Pin㊽
DV. SYNC

⑬

IC201 Pin㊿
COMPOSITE SYNC

⑭

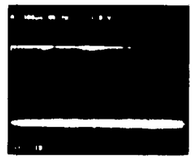

IC201 Pin(53)90
SERIAL DATA

⑮

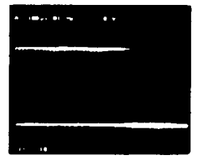

IC201 Pin(54)
SERIAL CLOCK

⑯

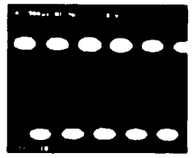

IC201 Pin(55)
CFG C.D

⑰

IC201 Pin(56)
CTL C.D

33	2.5
34	2.5
35	2.5
36	2.5
37	2.8
38	5
39	0
40	5
41	0
42	2.6
43	2.6
44	0
45	2.6
46	2.6
47	2.6
48	0
49	0
50	0.6
51	5
52	5
53	0.8
54	1.0
55	2.5
56	2.2

4. Key Schematic Diagram

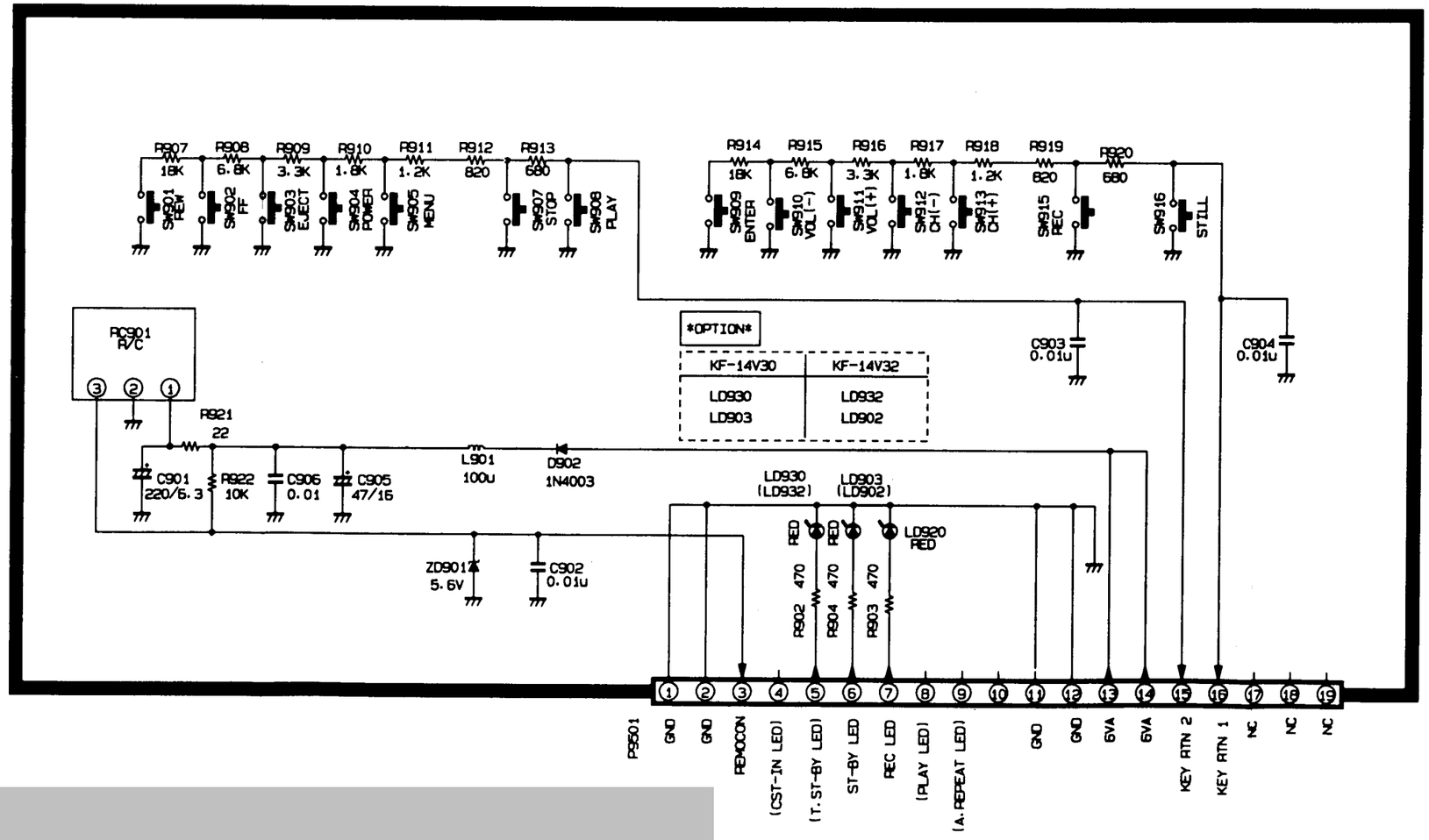

Shematic Diagram from http://cxema.ru

Shematic Diagram from http://cxema.ru

SCHEMATIC DIAGRAM

(PAL/SECAM/N3.58/N4.43)

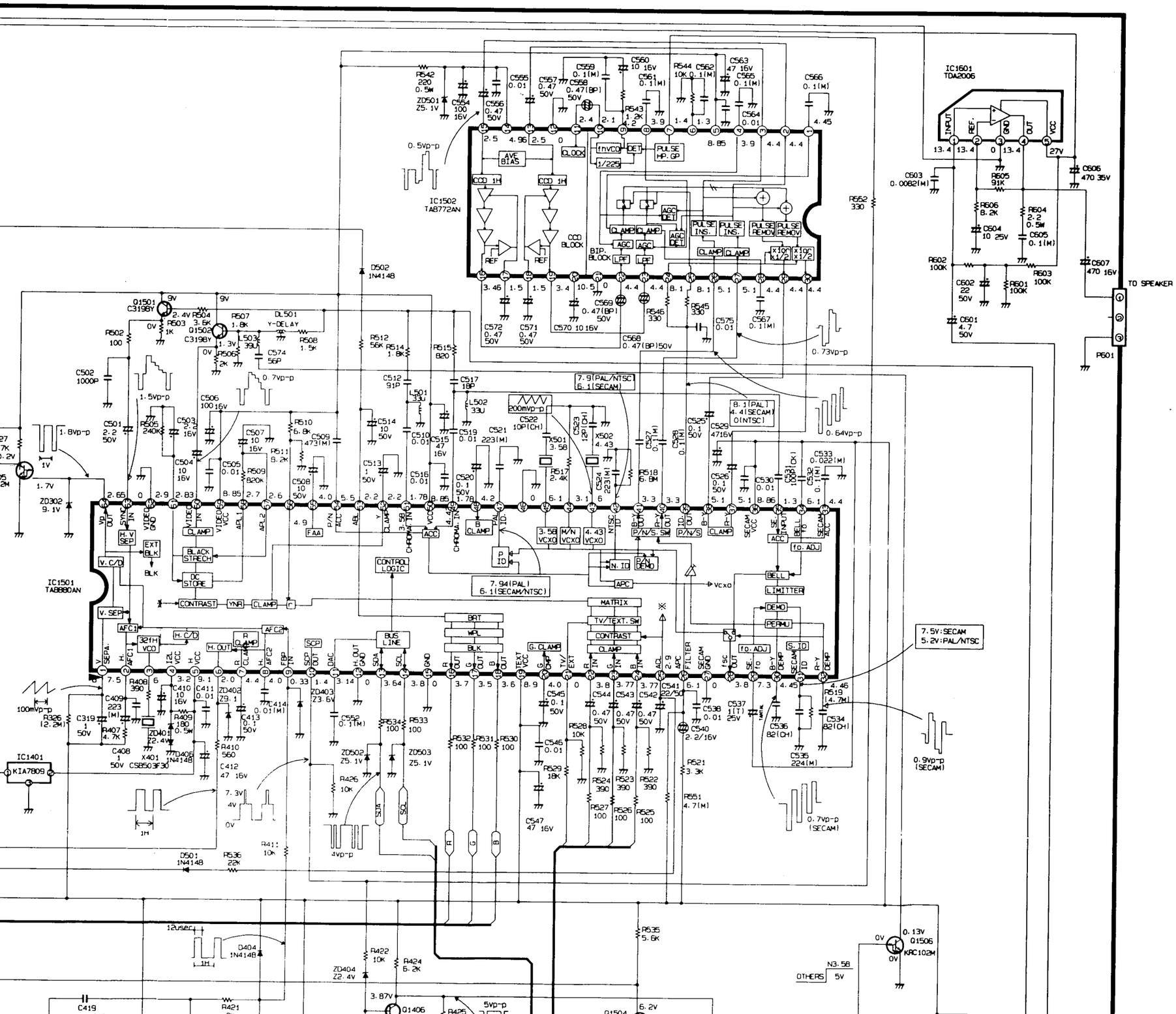

NOTICE

Since this is a basic schematic diagram.
The value of components and some partical connection aresubject to change for improvement.

The components marked ⚠ conform to VDE or IEC guidelines and are essential for safe operation of the set. while those marked ⚠ are required for correct operation. Use specified parts only when replacing.

VALUE OF RESISTER, CAPACITOR AND INDUCTOR

1. Resistances are shown in ohm. K = 1,000 M = 1,000,000
2. Unless otherwise noted in schematic, all capacitor values less than 1 are expresses in mfd and the values more than 1 in pF
3. Unless otherwise noted in schematic, all coil values more than 1 are expressed in uH, and the values less than 1 in H.

OBSERVATION OF VOLTAGES AND WAVEFORMS

1. Voltages read with VTVM from point shown to chassis ground. line voltages 220 Volts, colour bar signal
2. Voltages reading may very ±20%.
3. The schematic shown is representative only.
4. All waveforms are taken using a wide band oscilloscope and a low capacity probe.
5. Check FINE TUNING, AGC, BRIGHTNESS, CONTRAST and COLOUR controls for best picture. make sure that CONTRAST and COLOUR controls are in mid position and BRIGHTNESS controls is almost in maximum position.
6. Waveforms are takrn using a standard colour bar signal.

★TABLE OF INCH CONVERSION

NO	CIRCUIT NO	INCH 14"	INCH 20"	REMARK
1	R306	1K	1K	RESISTOR, FIX 1/2W
2	R313	4.7K	4.7K	RESISTOR, FIX 1/2W
3	R328	-	360	RESISTOR, FIX 1/6W
4	R329	-	1.8K	RESISTOR, FIX 1/6W
5	R330	-	10K	RESISTOR, FIX 1/6W
6	R702	75K	56K	RESISTOR, FIX 1/2W
7	R703	75K	56K	RESISTOR, FIX 1/2W
8	R904	8.2K	10K	RESISTOR, FIX 2W
9	R905	8.2K	10K	RESISTOR, FIX 2W
10	R906	8.2K	10K	RESISTOR, FIX 2W
11	FR704	2.0	1.2	RESISTOR, FUS 2W
12	C308	0.47	0.1	CAPACITOR, ELEC 50V
13	C402	772	862	CAPACITOR, MPP 1.6KV
14	C423	624	394	CAPACITOR, MPP 200V
15	L402	-224Q	-224C	COIL, LINEARITY(150-)
16	D304	-	1N4148	DIODE
17	D904	-	1N4148	DIODE
18	D905	-	1N4148	DIODE
19	D906	-	1N4148	DIODE
20	Q1304	-	C319BY	TRANSISTOR
21	T701	-207A	-207D	FBT(154-)
22	P901B	9P	10P	PIN WAFER
23		100F	-226D	CPT SOCKET(381-)
24		-M68A	-M68B	PCB(111-)

Shematic Diagram from http://cxema.ru

1. Monitor Main Schematic Diagram

MC-48A SCHEMATIC DIAGRAM (PAL/SECAM/N

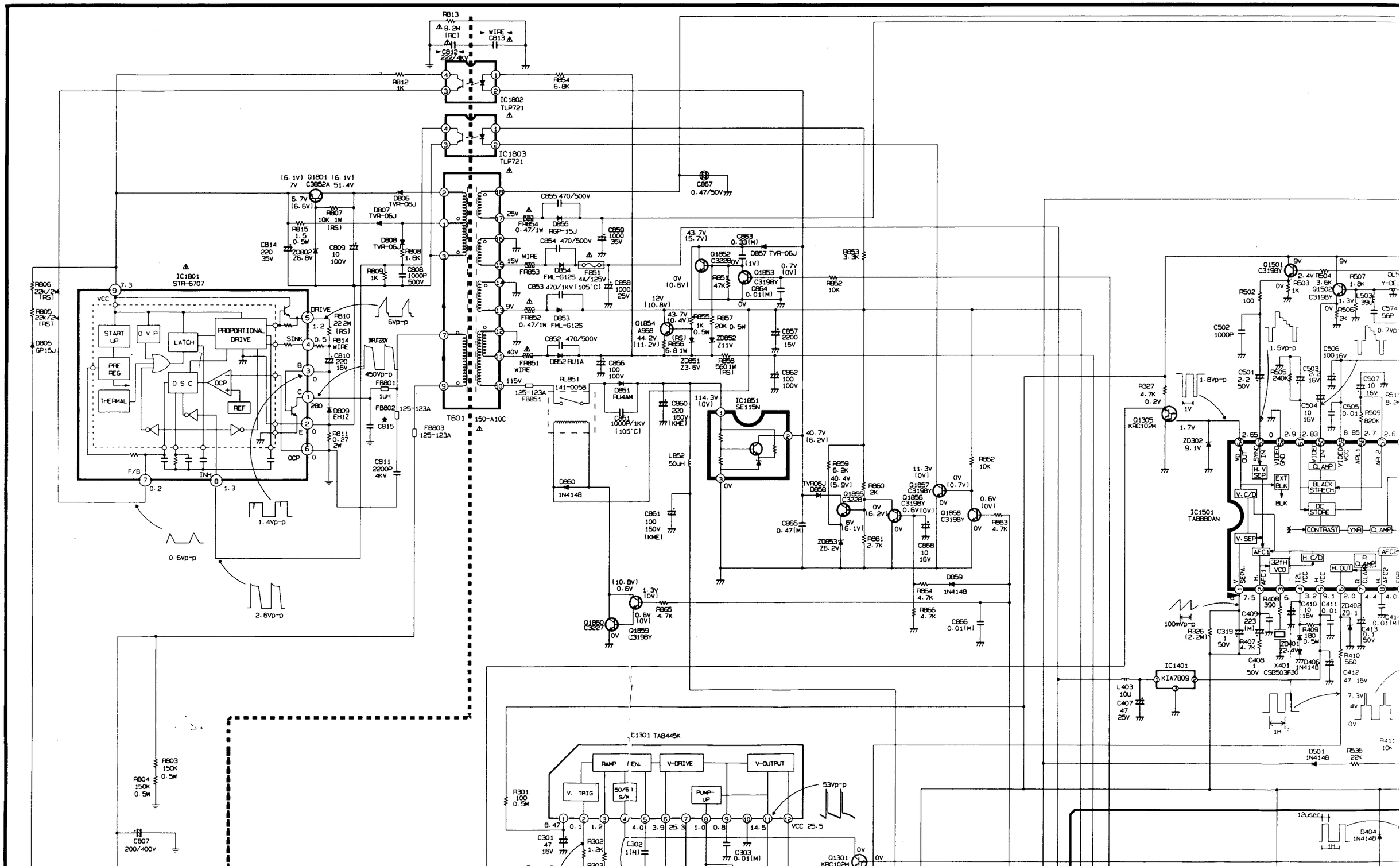

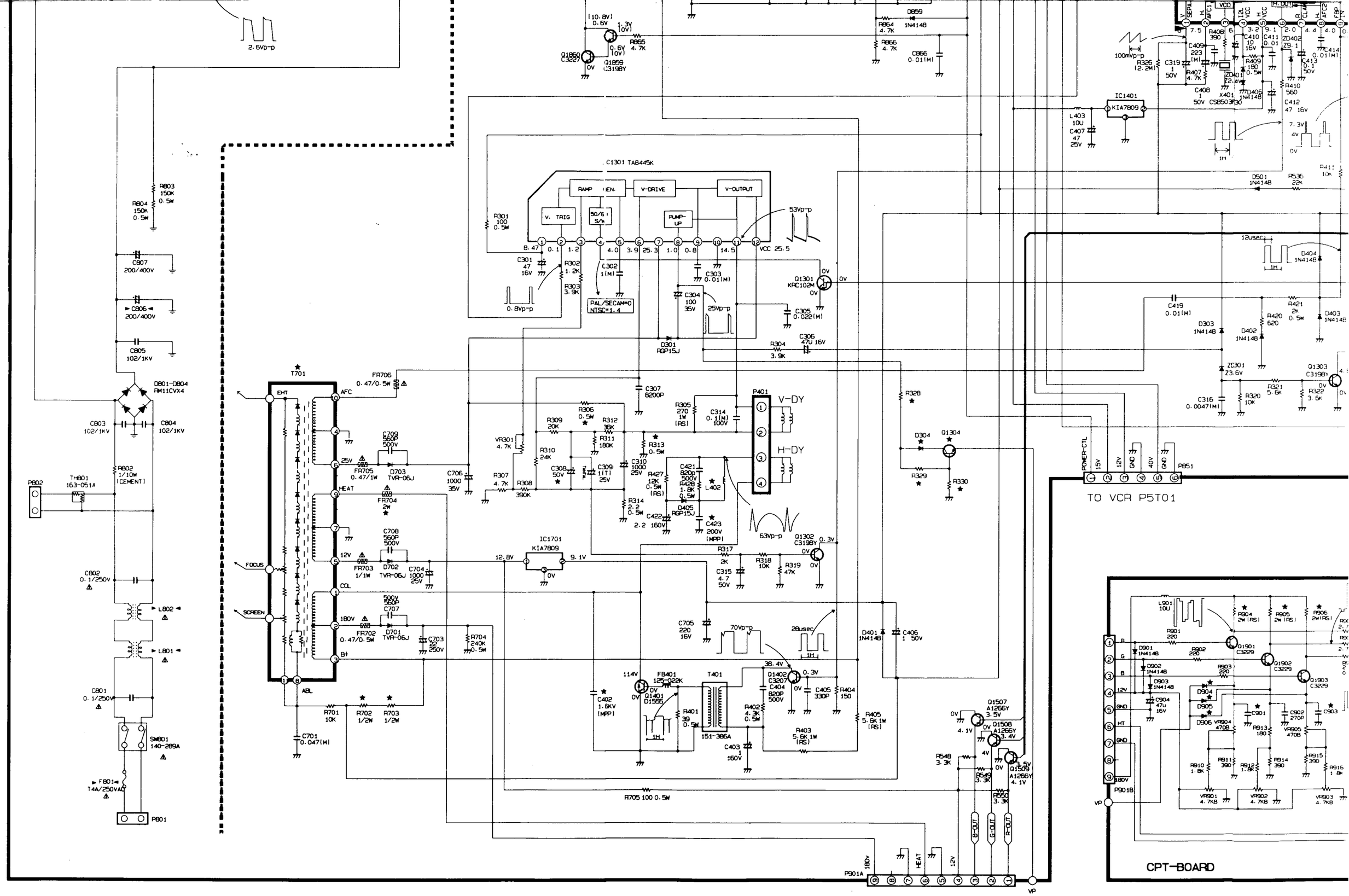

Shematic Diagram from http://cxema.ru

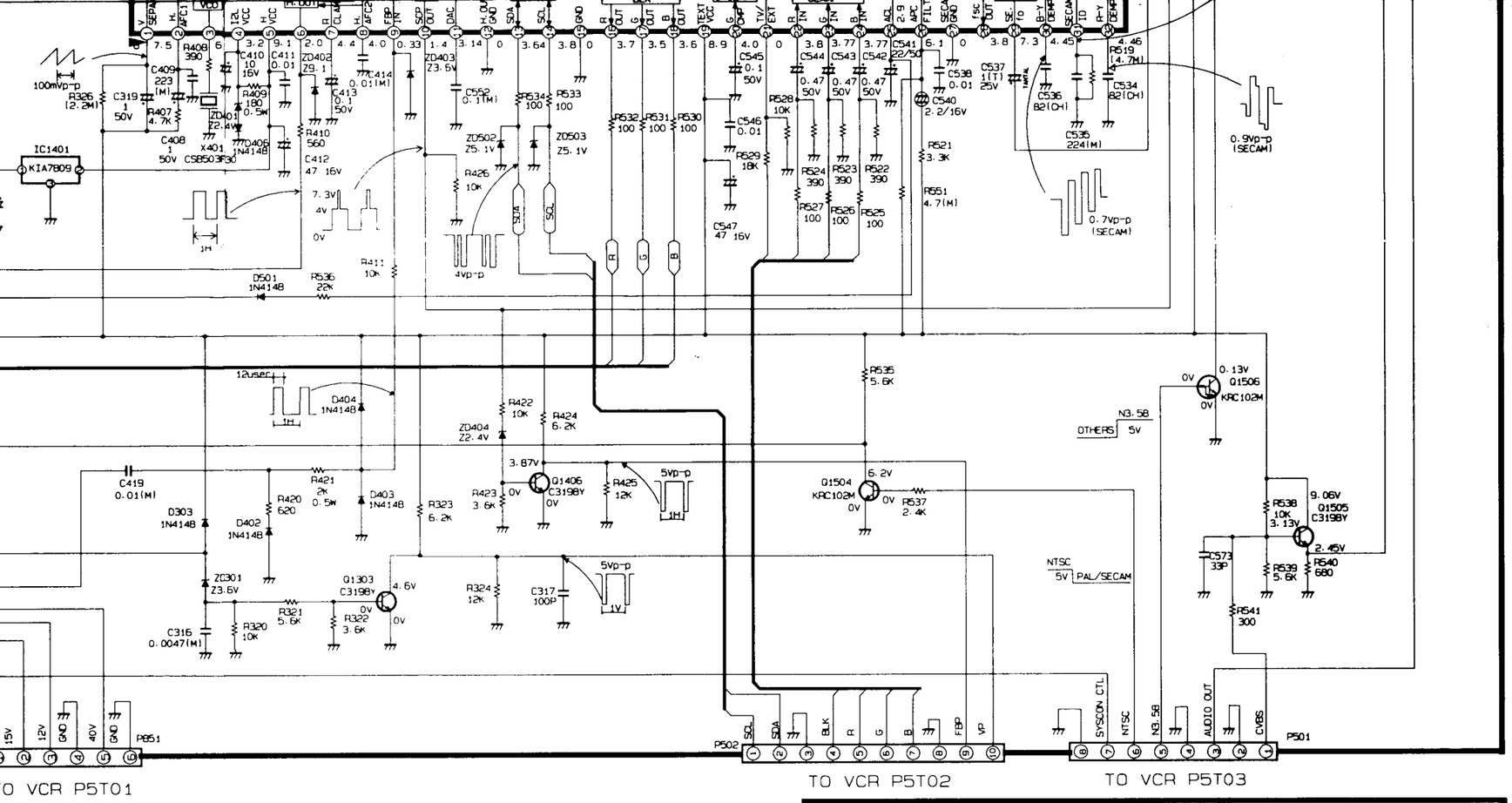

NO	CIRCUIT NO	INCH 14"	INCH 20"	REMARK
1	R306	1K	1K	RESISTOR·FIX 1/2W
2	R313	4.7K	4.7K	RESISTOR·FIX 1/2W
3	R328	-	360	RESISTOR·FIX 1/6W
4	R329	-	1.8K	RESISTOR·FIX 1/6W
5	R330	-	10K	RESISTOR·FIX 1/6W
6	R702	75K	56K	RESISTOR·FIX 1/2W
7	R703	75K	56K	RESISTOR·FIX 1/2W
8	R904	8.2K	10K	RESISTOR·FIX 2W
9	R905	8.2K	10K	RESISTOR·FIX 2W
10	R906	8.2K	10K	RESISTOR·FIX 2W
11	FR704	2.0	1.2	RESISTOR·FUS 2W
12	C308	0.47	0.1	CAPACITOR·ELEC 50V
13	C402	772	862	CAPACITOR·MPP 1.6KV
14	C423	624	394	CAPACITOR·MPP 200V
15	L402	-224Q	-224C	COIL·LINEARITY(150-)
16	D304	-	1N4148	DIODE
17	D904	-	1N4148	DIODE
18	D905	-	1N4148	DIODE
19	D906	-	1N4148	DIODE
20	Q1304	-	C3198Y	TRANSISTOR
21	T701	-207A	-207D	FBT(154-)
22	P901B	9P	10P	PIN WAFER
23		100F	-226Q	CPT SOCKET(381-)
24		-M68A	-M68B	PCB(111-)
25	C815	1000PF	-	CAPACITOR CERAMIC 1KV
26	C901	300PF	330PF	CAPACITOR CERAMIC
27	C903	300PF	330PF	CAPACITOR CERAMIC

TABLE OF POWER CONVERSION

NO	CIRCUIT NO	RANGE WIDE(100-270V)	RANGE NARROW(230V)	REMARK
1	F801	TIME LAG	HBC	FUSE
2	L801	-921A	-	LINE FILTER(150-)
3	L802	-	-982A	LINE FILTER(150-)
4	C806	200uF	-	CAPACITOR·ELEC 400V
5	C812	222	472	CAPACITOR·4KV
6	C813	TIN WIRE	472	CAPACITOR·4KV

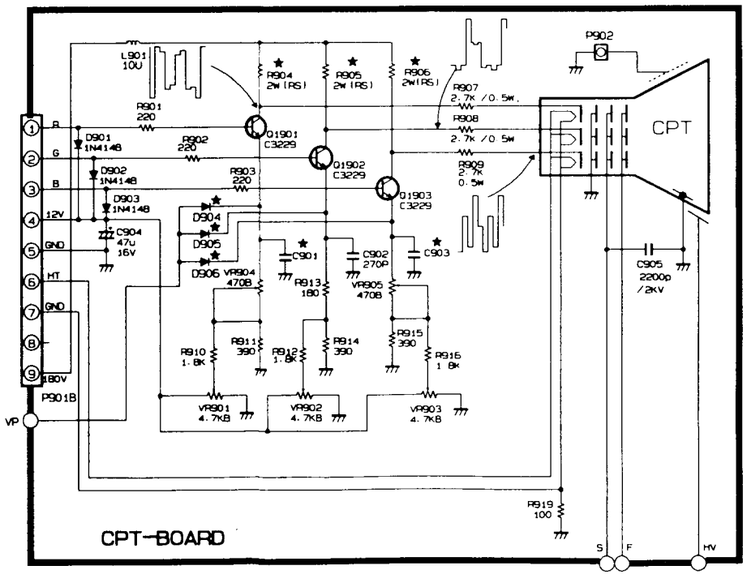

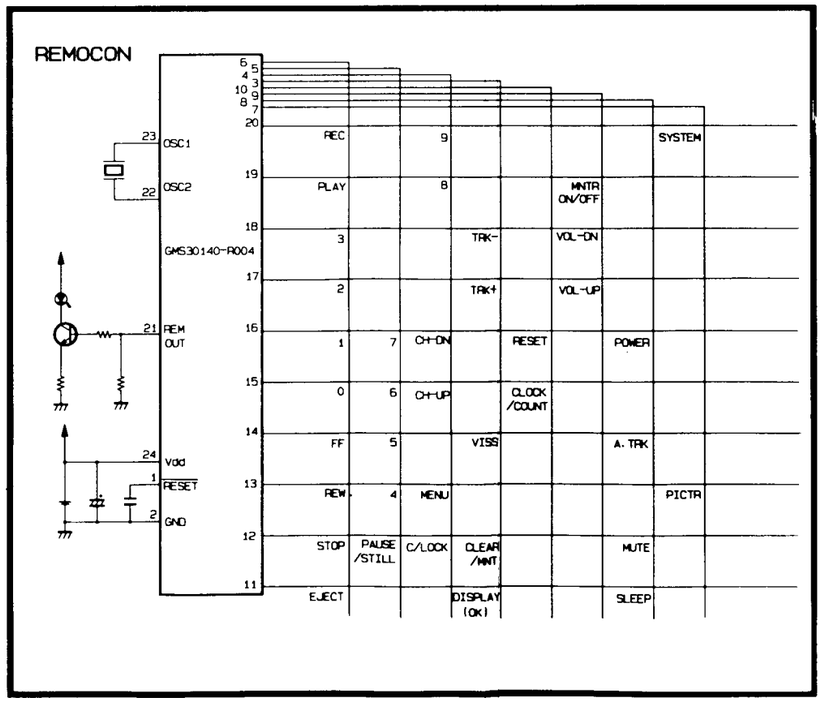

P/N : 484-903A

DATE : 01. 14. 1995

Shematic Diagram from http://cxema.ru